Ultra Fast and Soft Recovery Diode

USR60BPA12

● **Features**

- High speed recovery time (less than 100ns).
- Ultra soft recovery.
- Low forward voltage drop.

● **Applications**

- High frequency switched mode power supplies.
- Block diode (reverse current) as flywheel.
- Power factor and harmonic correction (snubber circuit)

● **Structures**

- Resin molded and Silicon epitaxial planar diode.
- TO-247 Package
- Approximate weight : 6.2g
- Terminal plating : 96.5Sn/3Ag/0.5Cu
- Conforms to RoHS regulations

● **Outline Drawing** Unit : mm

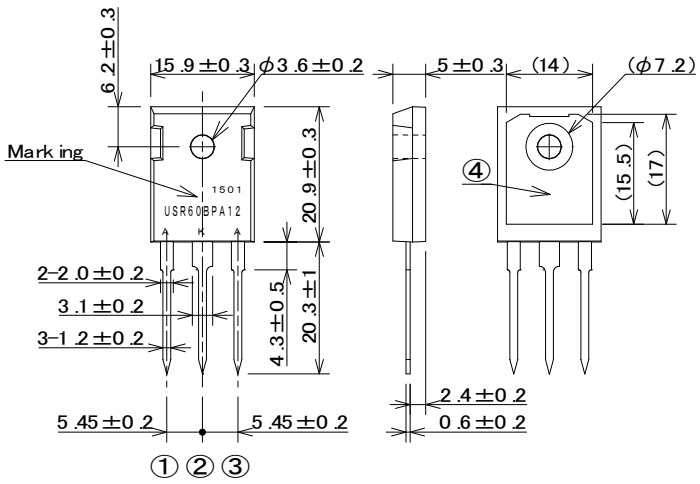

● **Absolute Maximum Ratings**

Items	Symbol	Conditions	Ratings	Unit
Repetitive Peak Reverse Voltage	V_{RM}		1200	V
Average Rectified Forward Current	I_O	Tc=60℃, Rectangular wave 180° , Resistive Load	60	A
Peak Forward Surge Current	I_{FSM}	Tj=25℃, 50Hz, Single-phase, Half sin wave, Non-Repetitive	600	A
Operating Junction Temperature	T_j		-40～+150	℃
Storage Temperature	T_{stg}		-40～+150	℃
Mounting Torque	TOR		0.8	N・m

● **Electrical Characteristics (Tj=25℃)**

Items	Symbol	Conditions	TYP.	MAX.	Unit
Forward Voltage Drop	V_F	I_F=60A	—	2.5	V
Reverse Current	I_R	V_R=1200V	—	200	μA
Reverse Recovery Time	trr	I_F=50A, dif/dt=-500A/μs	—	100	ns
Softness Factor (※)	SF	I_F=50A, dif/dt=-500A/μs	0.8	—	-
Thermal resistance	$R_{th(j-c)}$	Junction to Case	—	0.5	℃/W

(※)Definition of Softness Factor

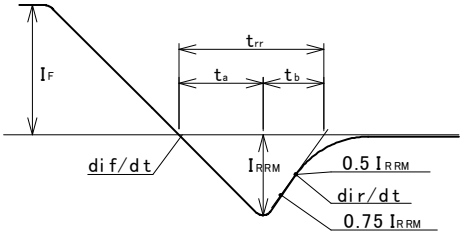

$$\text{Softness factor} = \frac{t_b}{t_a}$$

$$\text{dir/dt} \fallingdotseq \frac{I_{RRM}}{t_b} = \frac{\text{dif/dt} \times t_a}{t_b} = \frac{\text{dif/dt}}{SF}$$

● **Characteristics Diagrams**

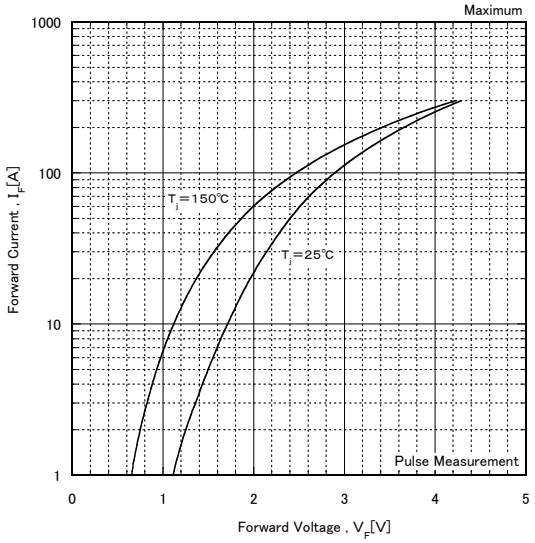

FORWARD CHARACTERISTICS

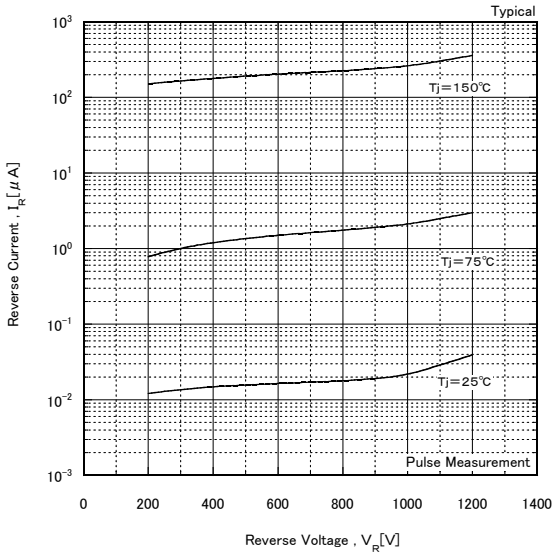

REVERSE CHARACTERISTICS

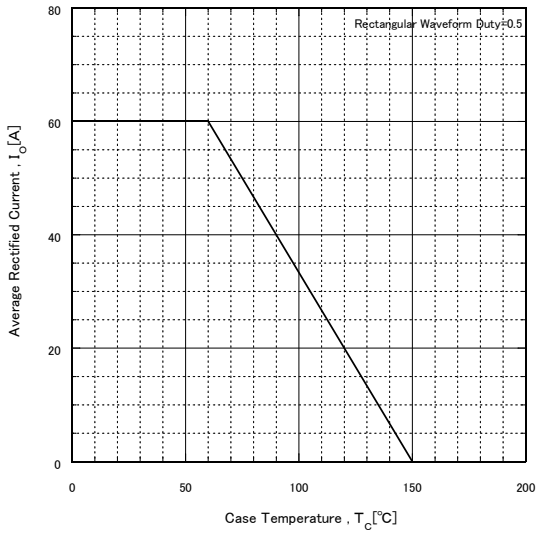

AVERAGE RECTIFIED FORWARD CURRENT